DTC	P2120	Throttle / Pedal Position Sensor / Switch "D" Circuit
DTC	P2122	Throttle / Pedal Position Sensor / Switch "D" Circuit Low Input
DTC	P2123	Throttle / Pedal Position Sensor / Switch "D" Circuit High Input
DTC	P2125	Throttle / Pedal Position Sensor / Switch "E" Circuit
DTC	P2127	Throttle / Pedal Position Sensor / Switch "E" Circuit Low Input
DTC	P2128	Throttle / Pedal Position Sensor / Switch "E" Circuit High Input
DTC	P2138	Throttle / Pedal Position Sensor / Switch "D" / "E" Voltage Correlation

DESCRIPTION

HINT:
These DTCs relate to the Accelerator Pedal Position (APP) sensor.
This ETCS (Electronic Throttle Control System) does not use a throttle cable.
The Accelerator Pedal Position (APP) sensor is mounted on the accelerator pedal bracket and has 2 sensor circuits: VPA1 (main) and VPA2 (sub). The voltage, which is applied to terminals VPA1 and VPA2 of the ECM, varies between 0 V and 5 V in proportion to the operating angle of the accelerator pedal (throttle valve). A signal from VPA1 indicates the actual accelerator pedal opening angle (throttle valve opening angle) and is used for engine control. A signal from VPA2 conveys the status of the VPA1 circuit and is used to check the APP sensor itself.
The ECM monitors the actual accelerator pedal opening angle (throttle valve opening angle) through the signals from VPA1 and VPA2, and controls the throttle actuator according to these signals.

cardiagn.com

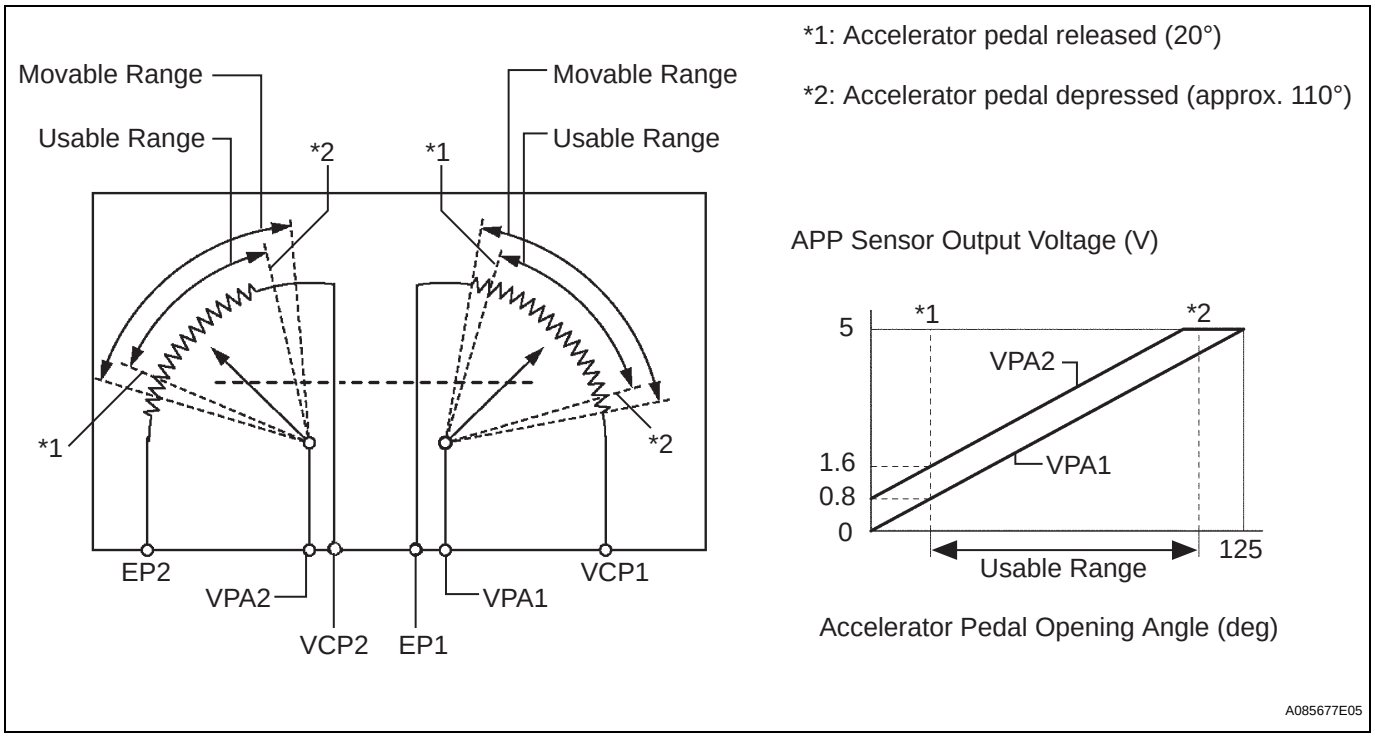

DTC No.	DTC Detection Conditions	Trouble Areas
P2120	VPA1 fluctuates rapidly beyond upper and lower malfunction thresholds for 0.5 seconds or more (1 trip detection logic)	• Accelerator Pedal Position (APP) sensor • ECM
P2122	VPA1 is 0.2 V or less for 0.5 seconds or more when accelerator pedal fully released (1 trip detection logic)	• APP sensor • Open in VCP1 circuit • Open or ground short in VPA1 circuit • ECM
P2123	VPA1 is 4.8 V or more for 2.0 seconds or more (1 trip detection logic)	• APP sensor • Open in EPA circuit • ECM
P2125	VPA2 fluctuates rapidly beyond upper and lower malfunction thresholds for 0.5 seconds or more (1 trip detection logic)	• APP sensor • ECM
P2127	VPA2 is 0.5 V or less for 0.5 seconds or more when accelerator pedal fully released (1 trip detection logic)	• APP sensor • Open in VCP2 circuit • Open or ground short in VPA2 circuit • ECM
P2128	Conditions (a) and (b) continue for 2.0 seconds or more (1 trip detection logic): (a) VPA2 is 4.8 V or more (b) VPA1 is between 0.2 V and 3.45 V	• APP sensor • Open in EPA2 circuit • ECM
P2138	Condition (a) or (b) continues for 2.0 seconds or more (1 trip detection logic): (a) Difference between VPA1 and VPA2 is 0.02 V or less (b) VPA1 is 0.2 V or less and VPA2 is 0.5 V or less	• APP sensor • Short between VPA1 and VPA2 circuits • ECM

HINT:
When any of these DTCs are set, check the APP sensor voltage by selecting the following menu items on an intelligent tester: DIAGNOSIS / ENHANCED OBD II / DATA LIST / ALL / ACCEL POS #1 and ACCEL POS #2. If using an OBD II scan tool, refer to the instruction manual.

Trouble Areas	ACCEL POS #1 When AP Released	ACCEL POS #2 When AP Released	ACCEL POS #1 When AP Depressed	ACCEL POS #2 When AP Depressed
VCP circuit open	Between 0 V and 0.2 V	Between 0 V and 0.2 V	Between 0 V and 0.2 V	Between 0 V and 0.2 V

cardiagn.com

Trouble Areas	ACCEL POS #1 When AP Released	ACCEL POS #2 When AP Released	ACCEL POS #1 When AP Depressed	ACCEL POS #2 When AP Depressed
Open or ground short in VPA circuit	Between 0 V and 0.2 V	Between 1.2 V and 2.0 V	Between 0 V and 0.2 V	Between 3.4 V and 5.0 V
Open or ground short in VPA2 circuit	Between 0.5 V and 1.1 V	Between 0 V and 0.2 V	Between 2.6 V and 4.5 V	Between 0 V and 0.2 V
EPA circuit open	Between 4.5 V and 5.0 V	Between 4.5 V and 5.0 V	Between 4.5 V and 5.0 V	Between 4.5 V and 5.0 V
Normal condition	Between 0.5 V and 1.1 V	Between 1.2 V and 2.0 V	Between 2.6 V and 4.5 V	Between 3.4 V and 5.0 V

HINT:
- Accelerator pedal positions are expressed as voltages.
- AP denotes for Accelerator Pedal.

MONITOR DESCRIPTION

When either of the voltage outputs of VPA1 or VPA2 deviates from the standard range, or the difference between the voltage outputs of the 2 sensor circuits is less than the threshold, the ECM determines that there is a malfunction in the APP sensor. The ECM then illuminates the MIL and sets a DTC.
Example:
When the voltage output of VPA1 drops below 0.2 V for more than 0.5 seconds when the accelerator pedal is fully depressed, DTC P2122 is set.
If the malfunction is not repaired successfully, a DTC is set 2 seconds after the engine is next started.

MONITOR STRATEGY

Related DTCs	P2120: Accelerator Pedal Position (APP) sensor 1 range check (fluctuating) P2122: APP sensor 1 range check (low voltage) P2123: APP sensor 1 range check (high voltage) P2125: APP sensor 2 range check (fluctuating) P2127: APP sensor 2 range check (low voltage) P2128: APP sensor 2 range check (high voltage) P2138: APP sensor range check (correlation)
Required Sensors/Components (Main)	APP sensor
Required Sensors/Components (Related)	-
Frequency of Operation	Continuous
Duration	0.5 seconds: P2120, P2122, P2125 and P2127 2.0 seconds: P2123, P2128 and P2138
MIL Operation	Immediate
Sequence of Operation	None

TYPICAL ENABLING CONDITIONS

The monitor will run whenever the following DTCs are not present	None

TYPICAL MALFUNCTION THRESHOLDS

P2120:

VPA1 voltage	0.4 V or less, or 4.8 V or more

P2122:

VPA1 voltage when VPA2 0.97° or more	0.4 V or less

P2123:

VPA1 voltage	4.8 V or more

P2125:

VPA2 voltage	1.2 V or less, or 4.8 V or more

cardiagn.com

P2127:

VPA2 voltage when VPA1 0.97° or more	1.2 V or less

P2128:

VPA2 voltage when VPA1 0.4 to 3.45 V	4.8 V or more

P2138:

Either of following conditions met:	Condition A or B
Condition A	-
Difference between VPA 1 and VPA 2 voltage	0.02 V or less
Condition B	-
VPA1 voltage	0.4 V or less
VPA2 voltage	1.2 V or less

COMPONENT OPERATING RANGE

VPA1 voltage	0.4 to 0.8 V
VPA2 voltage	1.2 to 4.8 V

FAIL-SAFE

When any of DTCs P2120, P2121, P2122, P2123, P2125, P2127, P2128 and P2138 are set, the ECM enters fail-safe mode. If either of the 2 sensor circuit malfunctions, the ECM uses the remaining circuit to calculate the accelerator pedal position to allow the vehicle to continue driving. If both of the circuits malfunction, the ECM regards the accelerator pedal as being released. As a result, the throttle valve is closed and the engine idles.
Fail-safe mode continues until a pass condition is detected, and the ignition switch is turned to OFF.

WIRING DIAGRAM

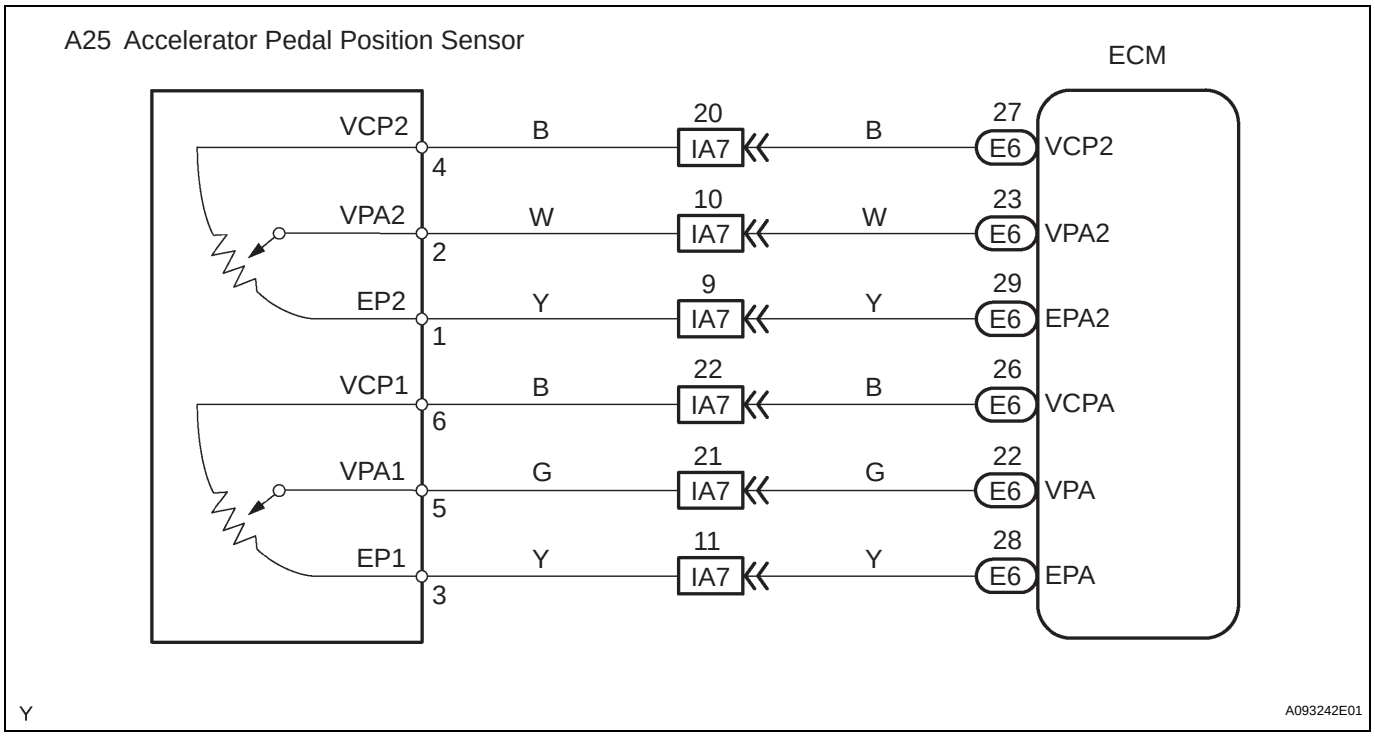

cardiagn.com

INSPECTION PROCEDURE

HINT:
Read freeze frame data using an intelligent tester or OBD II scan tool. The ECM records vehicle and driving condition information as freeze frame data the moment a DTC is stored. When troubleshooting, freeze frame data can be helpful in determining whether the vehicle was running or stopped, whether the engine was warmed up or not, whether the air-fuel ratio was lean or rich, as well as other data recorded at the time of a malfunction.

When using intelligent tester:

1 READ VALUE OF INTELLIGENT TESTER (ACCEL POS #1 AND ACCEL POS #2)

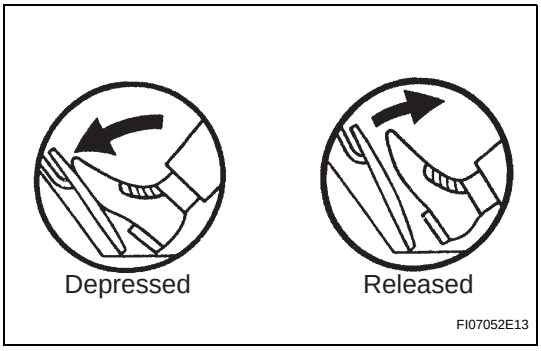

(a) Connect an intelligent tester to the DLC3.
(b) Turn the ignition switch to ON and turn the tester ON.
(c) Select the following menu items: DIAGNOSIS / ENHANCED OBD II / DATA LIST / ALL / ACCEL POS #1 and ACCEL POS #2.
(d) Read the values displayed on the tester.
Standard voltage

Accelerator Pedal Operations	ACCEL POS #1 (AP#1)	ACCEL POS #2 (AP#2)	Difference between AP#1 and AP#2
1. Released 2. Depressed 3. Released	Between 0.5 V and 4.5 V	Between 1.2 V and 5.0 V	More than 0.02 V

OK → **Go to step 6**

NG

2 INSPECT ACCELERATOR PEDAL ASSEMBLY (ACCELERATOR PEDAL POSITION SENSOR)

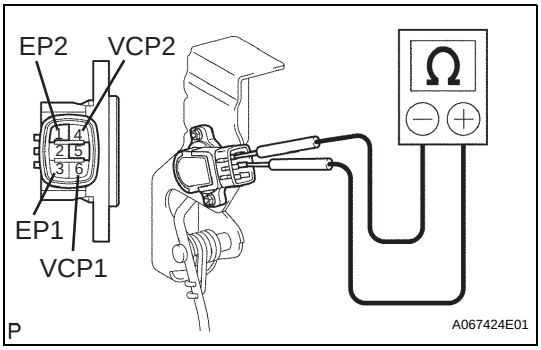

(a) Disconnect the A25 Accelerator Pedal Position (APP) sensor connector.
(b) Measure the resistance between each terminal.
Standard resistance

Tester Connections	Specified Conditions
3 - 6	Between 1.5 kΩ and 6.0 kΩ at 20°C (68°F)
1 - 4	Between 1.5 kΩ and 6.0 kΩ at 20°C (68°F)

(c) Reconnect the APP sensor connector.

NG → **REPLACE ACCELERATOR PEDAL ASSEMBLY**

OK

cardiagn.com

3 INSPECT ECM (VCPA AND VCP2 VOLTAGE)

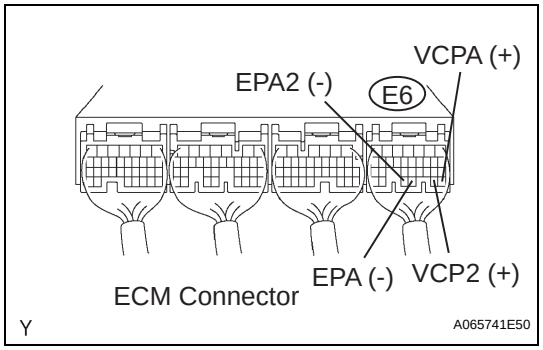

(a) Turn the ignition switch to ON.
(b) Measure the voltage between the terminals of the E6 ECM connector.
Standard voltage

Tester Connections	Specified Conditions
VCPA (E6-26) - EPA (E6-28)	Between 4.5 V and 5.5 V
VCP2 (E6-27) - EPA2 (E6-29)	Between 4.5 V and 5.5 V

NG → **REPLACE ECM**

OK

4 INSPECT ECM (VPA AND VPA2 VOLTAGE)

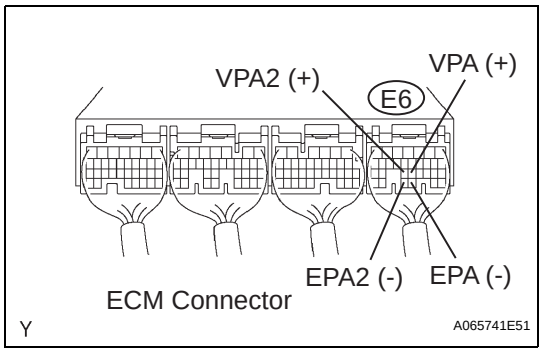

(a) Turn the ignition switch to ON.
(b) Measure the voltage between the terminals of the E6 ECM connector.
Standard voltage

Accelerator Pedal Operations	Tester Connections	Specified Conditions
Released	VPA (E6-22) - EPA (E6-28)	Between 0.5 V and 1.1 V
Depressed	VPA (E6-22) - EPA (E6-28)	Between 2.6 V and 4.5 V
Released	VPA2 (E6-23) - EPA2 (E6-29)	Between 1.2 V and 2.0 V
Depressed	VPA2 (E6-23) - EPA2 (E6-29)	Between 3.4 V and 5.3 V

OK → **REPLACE ECM**

NG

ES

cardiagn.com

5	CHECK HARNESS AND CONNECTOR (ECM - ACCELERATOR PEDAL POSITION SENSOR)

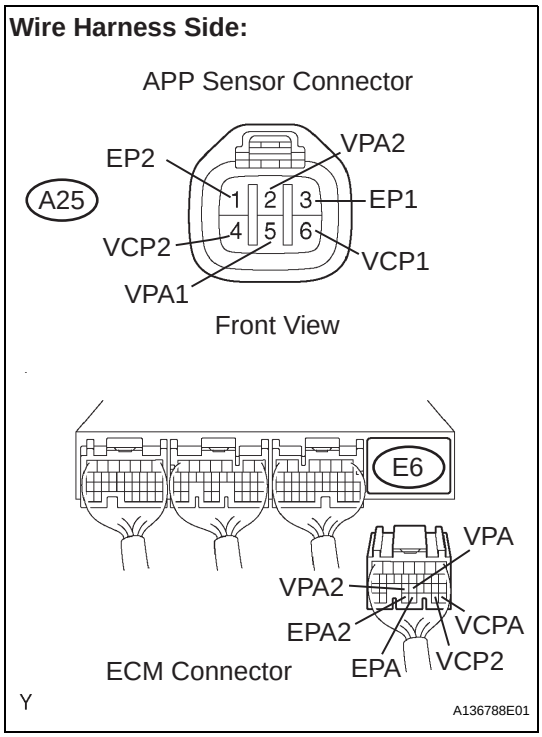

(a) Disconnect the A25 APP sensor connector.
(b) Disconnect the E6 ECM connector.
(c) Check the resistance.

Standard resistance (Check for open)

Tester Connections	Specified Conditions
VPA1 (A25-5) - VPA (E6-22)	Below 1 Ω
EP1 (A25-3) - EPA (E6-28)	Below 1 Ω
VCP1 (A25-6) - VCPA (E6-26)	Below 1 Ω
VPA2 (A25-2) - VPA2 (E6-23)	Below 1 Ω
EP2 (A25-1) - EPA2 (E6-29)	Below 1 Ω
VCP2 (A25-4) - VCP2 (E6-27)	Below 1 Ω

Standard resistance (Check for short)

Tester Connections	Specified Conditions
VPA1 (A25-5) or VPA (E6-22) - Body ground	10 kΩ or higher
EP1 (A25-3) or EPA (E6-28) - Body ground	10 kΩ or higher
VCP1 (A25-6) or VCPA (E6-26) - Body ground	10 kΩ or higher
VPA2 (A25-2) or VPA2 (E6-23) - Body ground	10 kΩ or higher
EP2 (A25-1) or EPA2 (E6-29) - Body ground	10 kΩ or higher
VCP2 (A25-4) or VCP2 (E6-27) - Body ground	10 kΩ or higher

(d) Reconnect the APP sensor connector.
(e) Reconnect the ECM connector.

NG → **REPAIR OR REPLACE HARNESS OR CONNECTOR**

OK

6	CHECK WHETHER DTC OUTPUT RECURS (ACCELERATOR PEDAL POSITION SENSOR DTCS)

(a) Connect the intelligent tester to the DLC3.
(b) Turn the ignition switch to ON and turn the tester ON.
(c) Clear DTCs (See page ES-30).
(d) Allow the engine to idle for 15 seconds.
(e) Select the following menu items: DIAGNOSIS / ENHANCED OBD II / DTC INFO / CURRENT CODES.
(f) Read DTCs.

Result

Display (DTC Output)	Proceed to
P2120, P2122, P2123, P2125, P2127, P2128 or P2138	A
No output	B

B → **CHECK FOR INTERMITTENT PROBLEMS**

cardiagn.com

A

REPLACE ECM

When Using OBD II Scan Tool:

1	INSPECT ACCELERATOR PEDAL ASSEMBLY (ACCELERATOR PEDAL POSITION SENSOR)

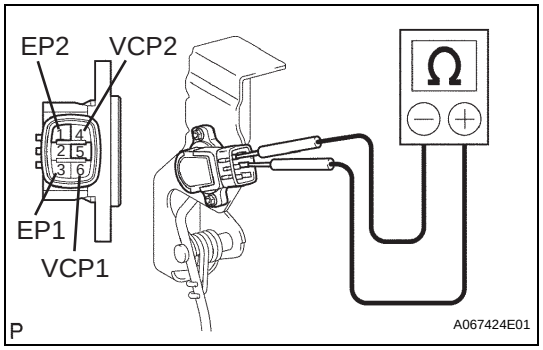

(a) Disconnect the A25 Accelerator Pedal Position (APP) sensor connector.
(b) Measure the resistance between each terminal.
Standard resistance

Tester Connections	Specified Conditions
3 - 6	Between 1.5 kΩ and 6.0 kΩ at 20°C (68°F)
1 - 4	Between 1.5 kΩ and 6.0 kΩ at 20°C (68°F)

(c) Reconnect the APP sensor connector.

NG → **REPLACE ACCELERATOR PEDAL ASSEMBLY**

OK

2	INSPECT ECM (VCPA AND VCP2 VOLTAGE)

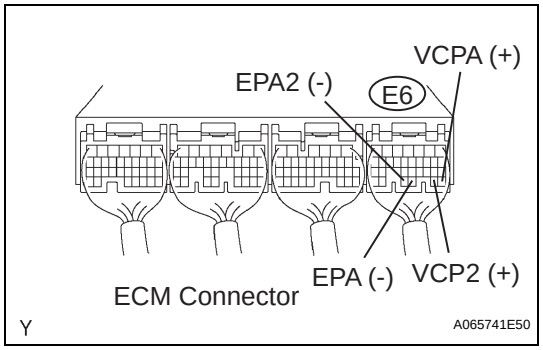

(a) Turn the ignition switch to ON.
(b) Measure the voltage between the terminals of the E6 ECM connector.
Standard voltage

Tester Connections	Specified Conditions
VCPA (E6-26) - EPA (E6-28)	Between 4.5 V and 5.5 V
VCP2 (E6-27) - EPA2 (E6-29)	Between 4.5 V and 5.5 V

NG → **REPLACE ECM**

OK

cardiagn.com

3 INSPECT ECM (VPA AND VPA2 VOLTAGE)

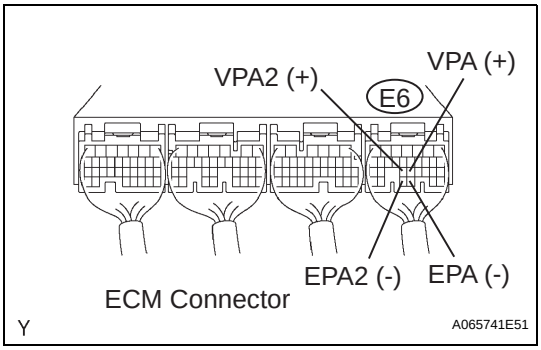

(a) Turn the ignition switch to ON.
(b) Measure the voltage between the terminals of the E6 ECM connector.

Standard voltage

Accelerator Pedal Operations	Tester Connections	Specified Conditions
Released	VPA (E6-22) - EPA (E6-28)	Between 0.5 V and 1.1 V
Depressed	VPA (E6-22) - EPA (E6-28)	Between 2.6 V and 4.5 V
Released	VPA2 (E6-23) - EPA2 (E6-29)	Between 1.2 V and 2.0 V
Depressed	VPA2 (E6-23) - EPA2 (E6-29)	Between 3.4 V and 5.3 V

OK → **REPLACE ECM**

NG

4 CHECK HARNESS AND CONNECTOR (ECM - ACCELERATOR PEDAL POSITION SENSOR)

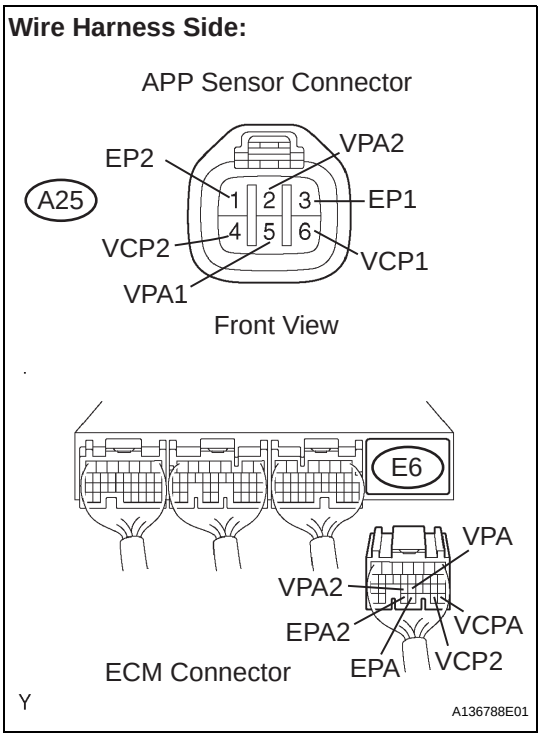

(a) Disconnect the A25 APP sensor connector.
(b) Disconnect the E6 ECM connector.
(c) Check the resistance.

Standard resistance (Check for open)

Tester Connections	Specified Conditions
VPA1 (A25-5) - VPA (E6-22)	Below 1 Ω
EP1 (A25-3) - EPA (E6-28)	Below 1 Ω
VCP1 (A25-6) - VCPA (E6-26)	Below 1 Ω
VPA2 (A25-2) - VPA2 (E6-23)	Below 1 Ω
EP2 (A25-1) - EPA2 (E6-29)	Below 1 Ω
VCP2 (A25-4) - VCP2 (E6-27)	Below 1 Ω

Standard resistance (Check for short)

Tester Connections	Specified Conditions
VPA1 (A25-5) or VPA (E6-22) - Body ground	10 kΩ or higher
EP1 (A25-3) or EPA (E6-28) - Body ground	10 kΩ or higher
VCP1 (A25-6) or VCPA (E6-26) - Body ground	10 kΩ or higher
VPA2 (A25-2) or VPA2 (E6-23) - Body ground	10 kΩ or higher
EP2 (A25-1) or EPA2 (E6-29) - Body ground	10 kΩ or higher
VCP2 (A25-4) or VCP2 (E6-27) - Body ground	10 kΩ or higher

(d) Reconnect the APP sensor connector.
(e) Reconnect the ECM connector.

NG → **REPAIR OR REPLACE HARNESS OR CONNECTOR**

OK

cardiagn.com

5	CHECK WHETHER DTC OUTPUT RECURS (ACCELERATOR PEDAL POSITION SENSOR DTCS)

(a) Connect an OBD II scan tool to the DLC3.
(b) Turn the ignition switch to ON and turn the scan tool ON.
(c) Clear DTCs using the scan tool.
(d) Allow the engine to idle for 15 seconds.
(e) Read DTCs using the scan tool.

Result

Display (DTC Output)	Proceed to
P2120, P2122, P2123, P2125, P2127, P2128 or P2138	A
No output	B

ES

B → **CHECK FOR INTERMITTENT PROBLEMS**

A

REPLACE ECM

cardiagn.com